GUARDIAN EQUIPMENT

Emergency Eye Wash and Shower Equipment

ANSI Z358.1
Compliance Checklist

Updated For 2004

660 North Union Street
Chicago, Illinois 60610
(312) 733-2626 P
(312) 733-4684 F

ANSI Z358.1-2004 Compliance Checklist

Introduction

The selection of emergency eye wash and shower equipment is often a complicated process. In addition to addressing design and engineering issues, specifiers must be aware of regulatory requirements and compliance standards. A common reference point when specifying emergency equipment is ANSI Z358.1, "Emergency Eye Wash and Shower Equipment." This standard is a widely accepted guideline for the proper selection, installation and maintenance of emergency equipment.

To assist specifiers in understanding the provisions of this standard, Guardian Equipment has prepared this ANSI Compliance Checklist. In this Checklist, we have summarized and graphically presented the provisions of the standard. This Checklist can serve as a starting point for designing emergency eye wash and shower systems.

Legal Requirements

The Occupational Safety and Health Act of 1970 was enacted to assure that workers are provided with "safe and healthful working conditions." Under this law, the Occupational Safety and Heath Administration (OSHA) was created and authorized to adopt safety standards and regulations to fulfill the mandate of improving worker safety.

OSHA has adopted several regulations that refer to the use of emergency eye wash and shower equipment. The primary regulation is contained in 29 CFR 1910.151, which requires that...

"...where the eyes or body of any person may be exposed to injurious corrosive materials, suitable facilities for quick drenching or flushing of the eyes and body shall be provided within the work area for immediate emergency use."

ANSI Z358.1

The OSHA regulation regarding emergency equipment is quite vague, in that it does not define what constitutes "suitable facilities" for drenching the eyes or body. In order to provide additional guidance to employers, the American National Standards Institute (ANSI) has promulgated a voluntary standard covering emergency eye wash and shower equipment. This standard—ANSI Z358.1—is intended to serve as a guideline for the proper design, performance, installation, use and maintenance of emergency equipment.

ANSI Z358.1 was originally adopted in 1981. It was rewritten in 1990, 1998 and again in 2004. This Compliance Checklist summarizes and graphically presents the provisions of the 2004 version of the standard.

General Considerations

ANSI Z358.1-2004 contains provisions regarding the design, performance, installation, use and maintenance of various types of emergency equipment (showers, eye washes, drench hoses, etc.). In addition to these provisions, there are some general considerations that apply to all emergency equipment. These considerations may not necessarily be part of the standard, but we believe that they should be addressed when considering emergency equipment. These include the following:

First Aid Devices

Emergency eye wash and shower units are designed to deliver water to rinse contaminants from a user's eyes, face or body. As such, they are a form of first aid equipment to be used in the event of an accident. However, they are not a substitute for primary protective devices (including eye and face protection and protective clothing) or for safe procedures for handling hazardous materials.

Emergency Response

Simply installing emergency equipment is not a sufficient means of assuring worker safety. Employees must be trained in the location of emergency equipment and in its proper use. Emergency equipment must be regularly maintained (including weekly activation of the equipment) to assure that it is in working order and inspected at least annually for compliance with the standard. Most importantly, employers should

 © 2004 / Guardian Equipment Co.

660 North Union Street
Chicago, Illinois 60610
(312) 733-2626 P
(312) 733-4684 F

develop a response plan to be used in the event that an accident does occur. The focus of the response plan should be to provide assistance to the injured worker as quickly as possible. We offer a variety of alarm systems which may be installed in conjunction with our emergency equipment. They serve to alert personnel and summon assistance if an eye wash or shower is activated. WE RECOMMEND INSTALLING AN ALARM UNIT WITH ANY EMERGENCY EYE WASH OR SHOWER UNIT.

Location of Emergency Equipment

In general, the ANSI standard provides that emergency equipment be installed within 10 seconds walking time from the location of a hazard. The equipment must be installed on the same level as the hazard (i.e. accessing the equipment should not require going up or down stairs or ramps). The path of travel from the hazard to the equipment should be free of obstructions and as straight as possible.

However, there are certain circumstances where these guidelines may not be adequate. For example, where workers are handling particularly strong acids, caustics or other materials where the consequences of a spill would be very serious, emergency equipment should be installed immediately adjacent to the hazard.

Laboratory environments may also require special consideration. It is common in many laboratory buildings to install emergency equipment in a corridor or hallway outside of the lab room. This may satisfy the provisions of the standard but still not provide workers with immediate access to emergency equipment. In these cases, we recommend installing combination eye wash/drench hose units at lab sinks (see page 7). These units are highly accessible and versatile. They provide immediate protection for the eyes, face or body when a spill involves a relatively small amount of hazardous material.

Water Temperature

The 2004 version of the standard states that the water temperature delivered by emergency equipment should be “tepid” (i.e. moderately warm or lukewarm). However, where it is possible that a chemical reaction might be accelerated by warm water, a medical professional should be consulted to determine what the optimum water temperature would be.

The delivery of tepid water to emergency equipment may raise complicated engineering issues. At a minimum, it generally involves providing both hot and cold water to the unit, and then installing a blending valve to mix the water to the desired temperature. Guardian offers a variety of mixing valves to blend and temper water. Please contact our office for further information.

Disposal of Water

The standard does not include any provisions regarding the disposal of waste water. However, designers must give consideration to where waste water will go. In particular, care must be taken that waste water not create a hazard (i.e. by creating a pool in which someone might slip) or freeze.

Generally, Guardian eye wash, eye/face wash and safety station units are designed with waste connections for connection to drain piping. WE RECOMMEND THAT EMERGENCY EYE WASH AND SHOWER UNITS BE CONNECTED TO DRAIN PIPING. FOR EMERGENCY SHOWERS AND FOR OTHER UNITS WITHOUT WASTE CONNECTIONS, FLOOR DRAINS SHOULD BE PROVIDED. After an emergency eye wash or shower has been used, the waste water may contain hazardous materials that cannot or should not be introduced into a sanitary sewer. It may be necessary to connect the drain piping from the emergency equipment or floor drain to the building’s acid waste disposal system or to a neutralizing tank.

© 2004 / Guardian Equipment Co.

GUARDIAN EQUIPMENT
Emergency Eye Wash and Shower Equipment

660 North Union Street
Chicago, Illinois 60610

(312) 733-2626 P
(312) 733-4684 F

Emergency Showers

This checklist is a summary of the provisions of ANSI Z358.1-2004 relating to emergency showers. Please refer to the standard for a complete listing of these provisions.

All Guardian emergency showers (except units with self-closing valves) are third-party certified to meet or exceed provisions of ANSI Z358.1-2004.

Shower shall provide 20 gallons (75.7 liters) of water per minute for 15 minutes. (Section 4.1.4, 4.5.5)

Shower head shall be between 82" (208.3 cm) and 96" (243.8 cm) above floor. (Section 4.1.2, 4.5.4)

Center of the water pattern shall be at least 16" (40.6 cm) from any obstructions. (Section 4.1.5)

At 60" (152.4 cm) above floor, the water pattern must be at least 20" (50.8cm) in diameter. (Section 4.1.5)

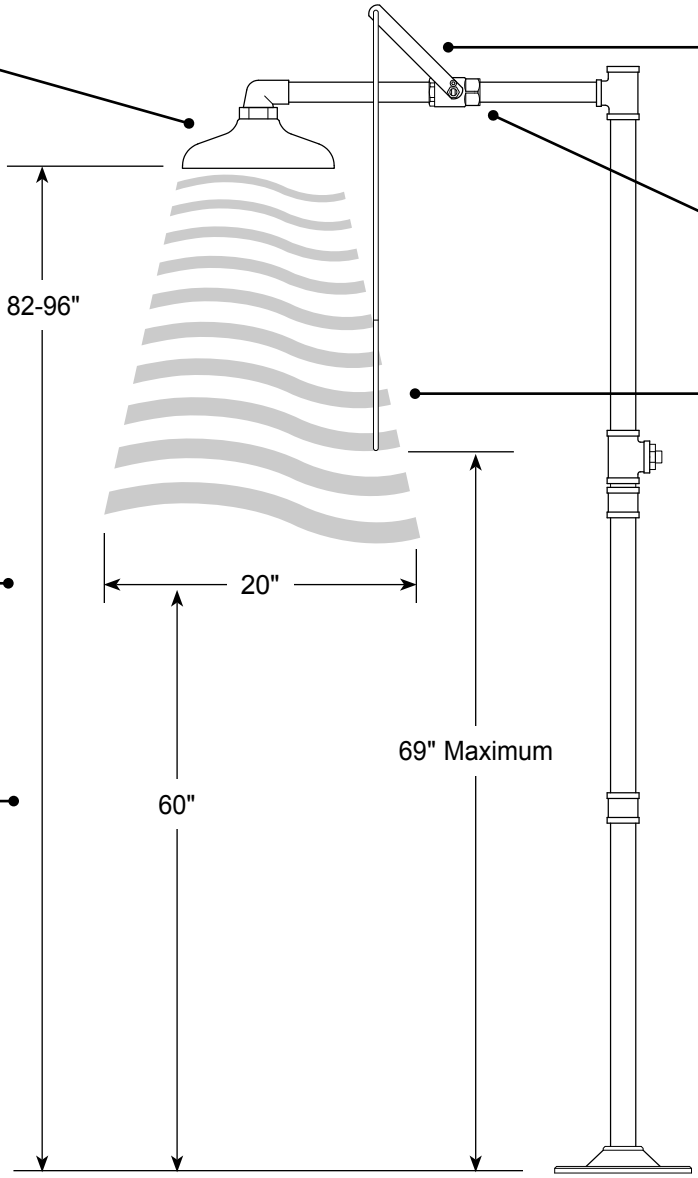

"Hands-free" stay-open valve activates in one second or less. (Section 4.2)

Water supply shall be sufficient to supply at least 20 GPM in required pattern for 15 minutes. (Sections 4.1.4, 4.5.5)

Easily located, accessible actuator no higher than 69" (173.3 cm) above floor. (Section 4.2)

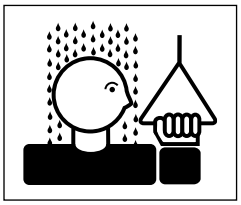

Identification
Identify shower location with highly visible sign. Area around shower shall be well lighted. (Section 4.5.3)

Location
Install shower within 10 seconds of hazard, on the same level as hazard and with unobstructed travel path. (Section 4.5.2)

Water Temperature
Water delivered by shower shall be tepid (lukewarm). (Section 4.5.6)

Training
Instruct all employees in the location and proper use of emergency showers. (Section 4.6.4)

Maintenance/Inspection
Activate shower at least weekly. (Section 4.6.2) Inspect annually for compliance with standard. (Section 4.6.5)

ETL Listed 101496
Units have been tested to and comply with ANSI Z358.1-2004

© 2004 / Guardian Equipment Co.

GUARDIAN EQUIPMENT
Emergency Eye Wash and Shower Equipment

660 North Union Street
Chicago, Illinois 60610

(312) 733-2626 P
(312) 733-4684 F

Eye/Face Washes

This checklist is a summary of the provisions of ANSI Z358.1-2004 relating to emergency eye/face washes. Please refer to the standard for a complete listing of these provisions.

All Guardian eye/face wash units (except units with self-closing valves) are third-party certified to meet or exceed the provisions of ANSI Z358.1-2004.

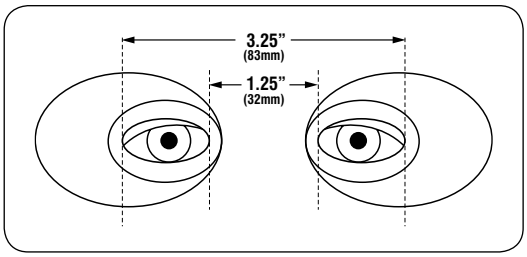

Use Guardian test gauge to test water flow. (6.1.7)

Controlled, low velocity flow completely rinses eyes and face and is not injurious to user. (Section 6.1.1)

Protect spray heads from airborne contaminants. (Section 6.1.3)

Valve actuator shall be easy to locate and readily accessible to user. (Section 6.2)

Unit must deliver at least 3.0 gallons (11.4 liters) of water per minute for 15 minutes. (Section 6.1.6, 6.4.5)

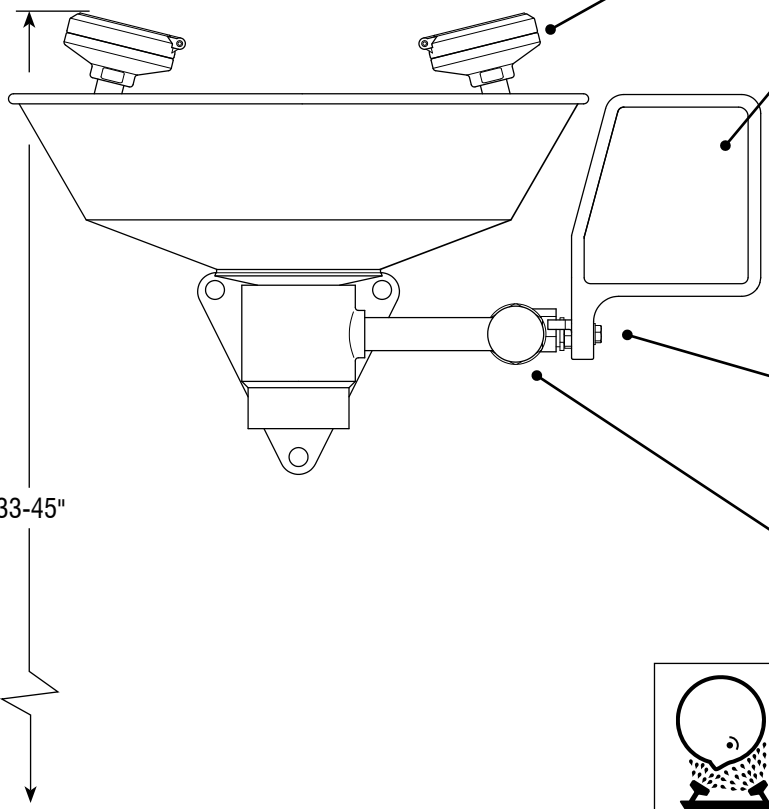

"Hands-free" stay-open valve shall activate in one second or less. (Section 6.1.4, 6.2)

Outlet heads shall be positioned between 33" (83.8 cm) and 45" (114.3 cm) from the floor and at least 6" (15.3 cm) from the wall or nearest obstruction. (Section 6.4.4)

Connect unit to uninterruptible water supply delivering at least 3.0 GPM. (Section 6.4.5)

Identification
Identify eye/face wash with highly visible sign. Area around eye/face wash shall be well lighted. (Section 6.4.3)

Location
Install eye/face wash unit within 10 seconds of hazard, on the same level as hazard and with unobstructed travel path. (Section 6.4.2)

Water Temperature
Water delivered by eye/face wash shall be tepid (lukewarm). (Section 6.4.6)

Training
Instruct all employees in the location and proper use of eye/face washes. (Section 6.5.4)

Maintenance/Inspection
Activate eye/face wash at least weekly. (Section 6.5.2)
Inspect annually for compliance with standard. (Section 6.5.5)

ETL Listed 101496
Units have been tested to and comply with ANSI Z358.1-2004

© 2004 / Guardian Equipment Co.

GUARDIAN EQUIPMENT
Emergency Eye Wash and Shower Equipment

660 North Union Street
Chicago, Illinois 60610

(312) 733-2626 P
(312) 733-4684 F

Eye Washes

This checklist is a summary of the provisions of ANSI Z358.1-2004 relating to emergency eye washes. Please refer to the standard for a complete listing of these provisions.

All Guardian eye wash units (except units with self-closing valves) are third-party certified to meet or exceed the provisions of ANSI Z358.1-2004.

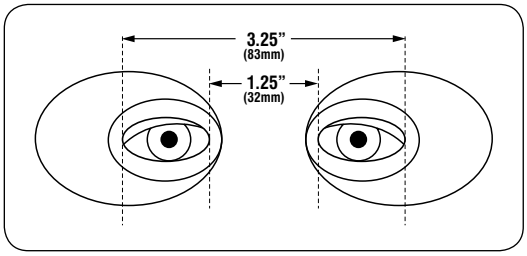

Use Guardian test gauge to test water flow. (5.1.8)

Controlled, low velocity flow rinses both eyes and is not injurious to user. (Section 5.1.1)

Protect spray heads from airborne contaminants. (Section 5.1.3)

Unit must deliver at least 0.4 gallons (1.5 liters) of water per minute for 15 minutes. (Section 5.1.6)

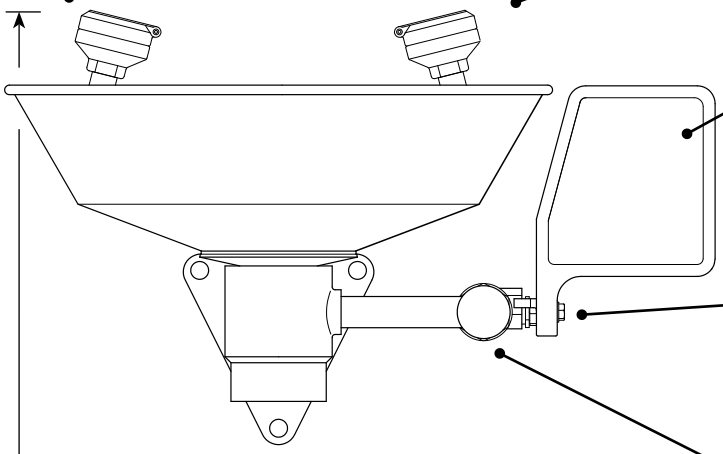

Valve actuator shall be easy to locate and readily accessible to user. (Section 5.2)

"Hands-free" stay-open valve activates in one second or less. (Section 5.2)

Connect unit to uninterruptible water supply delivering at least 0.4 GPM. (Section 5.4.5)

Outlet heads shall be positioned between 33" (83.8 cm) and 45" (114.3 cm) from the floor and at least 6" (15.3 cm) from the wall or nearest obstruction. (Section 5.4.4)

33-45"

Identification
Identify eye wash with highly visible sign. Area around eye wash shall be well lighted. (Section 5.4.3)

Location
Install eye wash unit within 10 seconds of hazard, on the same level as hazard and with unobstructed travel path. (Section 5.4.2)

Water Temperature
Water delivered by eye wash shall be tepid (lukewarm). (Section 5.4.6)

Training
Instruct all employees in the location and proper use of eye washes. (Section 5.5.4)

Maintenance/Inspection
Activate eye wash at least weekly. (Section 5.5.2) Inspect annually for compliance with standard. (Section 5.5.5)

ETL Listed 101496
Units have been tested to and comply with ANSI Z358.1-2004

© 2004 / Guardian Equipment Co.

GUARDIAN EQUIPMENT
Emergency Eye Wash and Shower Equipment

660 North Union Street
Chicago, Illinois 60610

(312) 733-2626 P
(312) 733-4684 F

Eye Wash/Drench Hose Units

ANSI Standard Z358.1-2004 states that drench hose units may supplement, but may not be used in place of, dedicated eye wash units. Guardian offers a series of units that meet the provisions for *both* an eye wash *and* a drench hose. These dual purpose units can be used to combine an eye wash and a drench hose into a single versatile, economic unit.

To use the unit as a fixed eye wash, simply leave the unit in the holder. The dual spray heads will deliver water to both eyes simultaneously. To function as a drench hose, remove the unit from the holder and rinse any part of the eyes, face or body.

These units are particularly useful in areas such as laboratories where workers are handling relatively small quantities of injurious materials. However, should a spill occur, it might affect any part of the worker's eyes, face or body. Eye wash/drench hose units offer a degree of versatility not found with other types of emergency equipment.

This checklist summarizes the provisions of ANSI Z358.1-2004 for *both* eye washes *and* drench hoses. Please refer to the standard for a complete listing of these provisions.

All Guardian eye wash/drench hose units are third-party certified to meet or exceed the provisions of ANSI Z358.1-2004.

Outlet heads shall be positioned between 33" (83.8 cm) and 45" (114.3 cm) from the floor and at least 6" (15.3 cm) from the wall or nearest obstruction. (Section 5.4.4)

Controlled, low velocity flow rinses both eyes and is not injurious to user. (Sections 5.1.1 and 8.2.1)

Valve actuator shall be easy to locate and readily accessible to the user. (Sections 5.2 and 8.2.2)

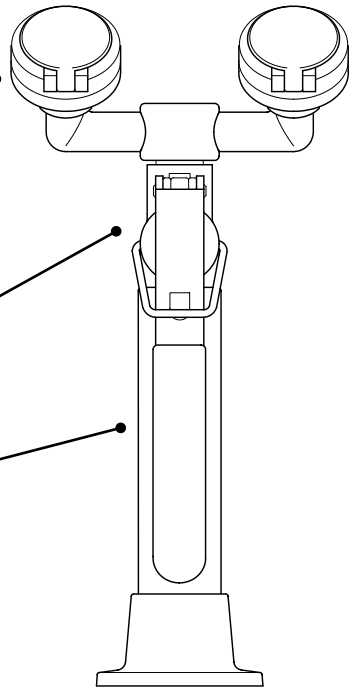

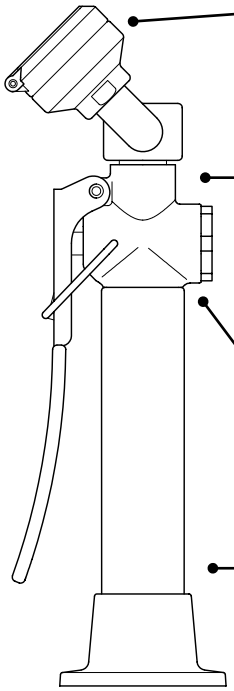

Protect spray heads from airborne contaminants. (Section 5.1.3)

Unit must deliver at least 0.4 gallons (1.5 liters) of water per minute for 15 minutes. (Section 5.1.6)

"Hands-free" stay-open valve shall activate in one second or less. (Sections 5.2 and 8.2.2)

Connect unit to uninterruptible water supply delivering at least 0.4 GPM. (Section 5.4.5 and 8.2.3.3)

Identification
Identify eye wash/drench hose unit with highly visible sign. Area around unit shall be well lighted. (Sections 5.4.3 and 8.2.3.2)

Location
Install eye wash/drench hose unit within 10 seconds of hazard, on same level as hazard and with unobstructed travel path. (Section 5.4.4)

Water Temperature
Water delivered by eye wash/drench hose units shall be tepid (lukewarm). (Sections 5.4.6 and 8.2.3.4)

Training
Instruct all employees in the location and proper use of eye wash/drench hose units. (Sections 5.5.4 and 8.2.4.3)

Maintenance/Inspection
Activate eye wash/drench hose units at least weekly. (Sections 5.5.2 and 8.2.4.2) Inspect annually for compliance with standard. (Section 5.5.5)

ETL Listed 101496
Units have been tested to and comply with ANSI Z358.1-2004

© 2004 / Guardian Equipment Co.

660 North Union Street
Chicago, Illinois 60610
(312) 733-2626 P
(312) 733-4684 F

Drench Hose Units

Under ANSI Z358.1-2004, drench hose units support plumbed and self-contained emergency eye wash and shower stations, but cannot replace them. In other words, drench hoses are intended solely as supplemental units providing additional protection to personnel.

Drench hoses are useful in cases where the user is in a prone position or where it is necessary to reach areas of the face and body inaccessible to the fixed stream of a shower or eye wash unit. They are also advantageous in areas (such as laboratories) where they can be installed close to where accidents might occur.

This checklist summarizes the provisions of ANSI Z358.1-2004 relating to drench hoses. Please refer to the standard for a complete listing of these provisions.

All Guardian drench hose units are third-party certified to meet or exceed the provisions of ANSI Z358.1-2004.

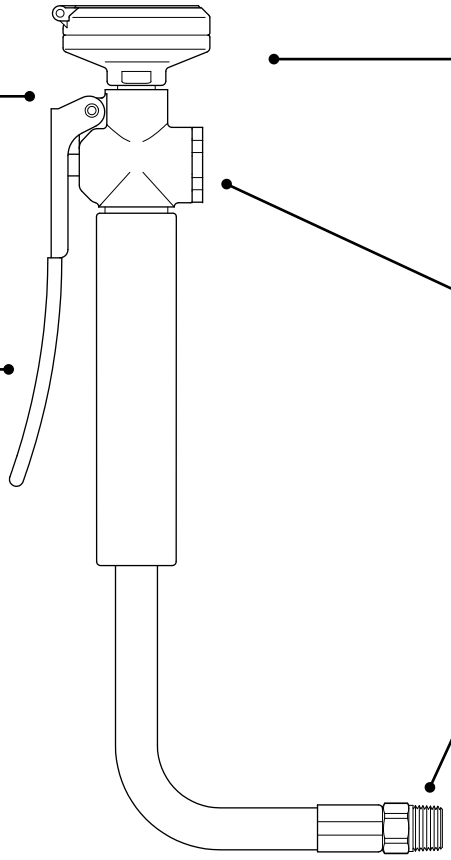

Drench hose unit supplements shower and eye wash units installed in vicinity. (Section 8)

Controlled, low velocity flow is not injurious to user. (Section 8.2.1)

Valve shall go from "off" to "on" in one second or less. (Section 8.2.2)

Valve actuator shall be easy to locate and readily accessible to the user. (Section 8.2.2)

Connect unit to uninterruptible water supply. (Section 8.2.3.3)

Identification
Identify drench hose unit with highly visible sign. Area around drench hose shall be well lighted. (Section 8.2.3.2)

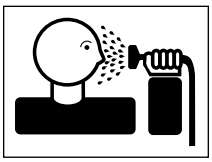

Location
Install drench hose unit in area free of debris or obstructions. (Section 8.2.3.2)

Water Temperature
Water delivered by drench hose shall be tepid (lukewarm). (Section 8.2.3.4)

Training
Instruct all employees in the location and proper use of drench hoses. (Section 8.2.4.3)

Maintenance/Inspection
Activate drench hoses at least weekly. (Section 8.2.4.2)

ETL Listed 101496
Units have been tested to and comply with ANSI Z358.1-2004

 © 2004 / Guardian Equipment Co.

GUARDIAN EQUIPMENT
Emergency Eye Wash and Shower Equipment

660 North Union Street
Chicago, Illinois 60610

(312) 733-2626 P
(312) 733-4684 F

Safety Stations

This checklist is a summary of the provisions of ANSI Z358.1-2004 relating to eye or eye/face wash and shower combination stations. Please refer to the standard for a complete listing of these provisions.

All Guardian safety stations (except units with self-closing valves) are third-party certified to meet or exceed the provisions of ANSI Z358.1-2004.

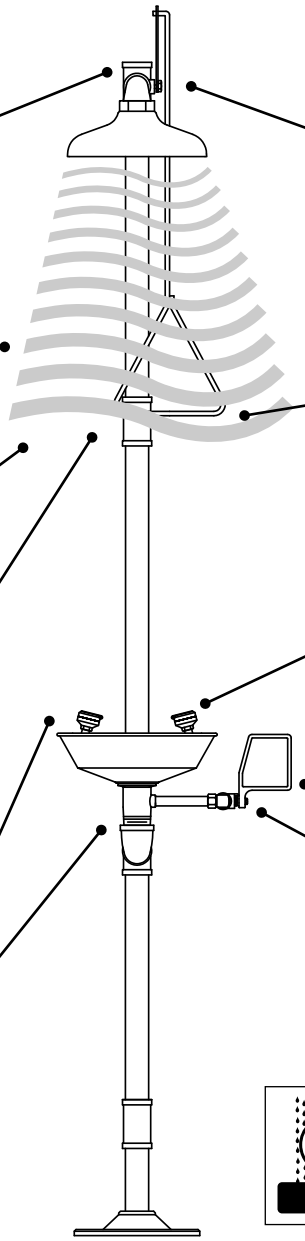

Connect unit to uninterruptible water supply capable of delivering required flow when all components are operated simultaneously. (Section 4.1.4, 4.5.5, 7.4.4)

Shower shall provide 20 gallons (75.7 liters) of water per minute for 15 minutes. (Section 4.1.1, 4.5.5)

Shower head shall be between 82" (208.3 cm) and 96" (248.3 cm) above floor. (Section 4.1.2, 4.5.4)

At 60" (152.4 cm) above floor, the water pattern must be at least 20" (50.8 cm) in diameter. (Section 4.1.5)

Protect outlet heads from airborne contaminants. (Section 5.1.3)

Unit must deliver at least 3.0 GPM (11.4 liters) (for eye/face wash) or 4.0 GPM (1.5 liters) (for eye wash) for 15 minutes. (Section 5.1.6, 6.1.6, 6.4.5)

"Hands-free" stay-open valve activates in one second or less. (Section 4.2)

Easily located, accessible actuator no higher than 69" (173.3 cm) above floor. (Section 4.2)

Outlet heads shall be positioned between 33" (83.8 cm) and 45" (114.3 cm) from the floor. (Section 5.4.4, 6.4.4)

Valve actuator shall be easy to locate and readily accessible to user. (Section 5.2, 6.2)

"Hands-free" stay-open valve shall activate in one second or less. (Section 5.2, 6.1.4, 6.2)

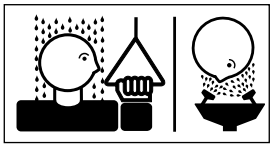

Identification
Identify safety station with highly visible sign. Area around safety station shall be well lighted. (Section 7.4.3)

Location
Install safety station within 10 seconds of hazard, on the same level as hazard and with unobstructed travel path. (Section 7.4.2)

Water Temperature
Water delivered by safety station shall be tepid (lukewarm). (Section 7.4.5)

Training
Instruct all employees in the location and proper use of safety station. (Section 7.5.4)

Maintenance/Inspection
Activate safety station at least weekly. (Section 7.5.2)
Inspect annually for compliance with standard. (Section 7.5.5)

ETL Listed 101496
Units have been tested to and comply with ANSI Z358.1-2004

© 2004 / Guardian Equipment Co.

660 North Union Street
Chicago, Illinois 60610
(312) 733-2626 P
(312) 733-4684 F

Barrier-Free Equipment

The Americans with Disabilities Act (ADA) requires that employers provide accessible workplaces for all employees. These workplaces may therefore require emergency eye wash and shower equipment that is specially constructed to provide access to handicapped persons.

Barrier-free emergency equipment must comply with the provisions of ANSI 117.1-1992 ("Accessible and Usable Buildings and Facilities"). These provisions include dimensions for minimum knee clearance, maximum height and reach, and minimum distance from obstructions.

Guardian offers an array of eye wash and shower units designed for barrier-free applications. These units meet the provisions of ANSI Z358.1-2004 for emergency equipment *and* the provisions of ANSI A117.1-1992 for accessibility. The provisions of ANSI Z358.1-2004 are summarized on pages 2-9. The *additional* provisions of ANSI A117.1-1992 for accessibility are shown below. Please refer to these standards for a complete description of these provisions.

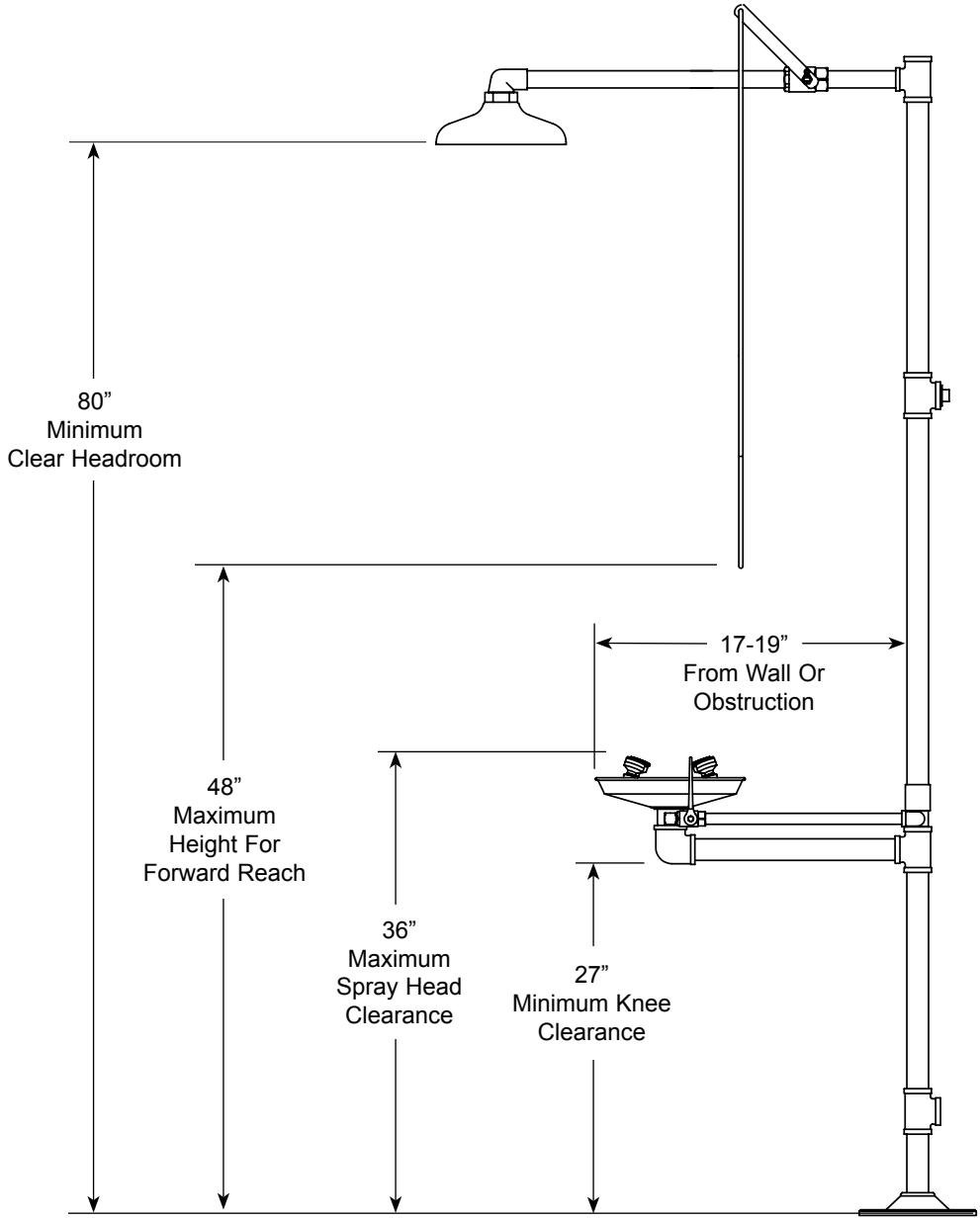

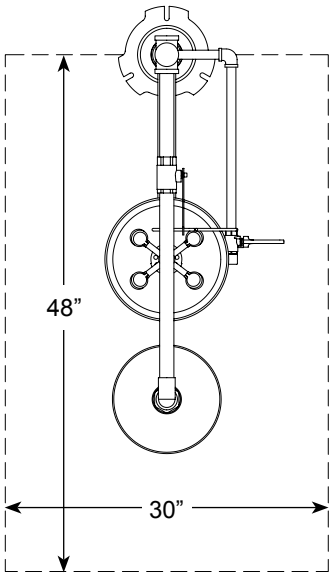

Clear Floor Space Requirements

ETL Listed 101496
Units have been tested to and comply with ANSI Z358.1-2004

 © 2004 / Guardian Equipment Co.

660 North Union Street
Chicago, Illinois 60610

(312) 733-2626 P
(312) 733-4684 F

Guardian Emergency Eye Wash and Shower Equipment: Engineered for today's industrial environments

Today's safe workplaces demand advanced emergency eye wash and shower equipment. Guardian Equipment is proud to offer the most complete selection of emergency equipment designed for industrial applications. These products are characterized by enhanced performance and superior durability.

All Guardian eye wash, eye/face wash and safety station units utilize the unique GS-Plus and FS-Plus spray heads. These spray heads represent a truly important innovation in eye wash technology.

GS-Plus and FS-Plus spray heads deliver water in a soft, wide spray rather than a solid, narrow stream. The user receives more water over a wider area than with any other type of outlet head. In an emergency, contaminants are rinsed away quickly, gently and completely.

These heads incorporate a variety of unique and important features:

- **"Flip Top" Dust Cover.** Each spray head is protected against dust and dirt by a "flip top" cover. Water flow swings the cover off the head. The cover is permanently attached to the spray head by a stainless steel pin; the cover cannot be removed or lost. The cover nests into the top of the outlet head, assuring that the cover always stays on the head when the unit is not in use. An optional stainless steel cover is also available.
- **Consistent, Balanced Flow.** An engineered flow control located inside the spray head is calibrated to deliver 1.8 (GS-Plus) or 3.2 (FS-Plus) gallons per minute, at pressures from 20 to 100 PSI. The flow is consistent, regardless of line pressure. Since each head contains an individual flow control, the flow is evenly balanced between the heads.
- **Filtered Water.** Each spray head contains an internal filter to remove particles and debris from the water flow. During rinsing, the user's eyes and face are protected against any foreign matter which may be in the water or the plumbing lines.
- **Durability.** The body and spray cover are molded from tough impact- and corrosion-resistant polypropylene. The dust cover is molded nylon. They will stand up to even the harshest laboratory environments.
- **Ease of Maintenance.** Water often contains dissolved minerals and foreign matter which over time can clog up any outlet head. The GS-Plus and FS-Plus spray heads are designed so that all working components are contained in the head itself. All components are readily accessible for cleaning and maintenance. The unit itself should never need disassembly.

ETL Listed 101496
Units have been tested to and comply with ANSI Z358.1-2004

© 2004 / Guardian Equipment Co.

gesafety.com

the place to...

- view new products
- request literature
- download specifications
- view our ANSI compliance guide
- request free samples
- contact sales representatives
- download O&M guides

GUARDIAN EQUIPMENT

Emergency Eye Wash and Shower Equipment

660 North Union Street
Chicago, Illinois 60610
gesafety.com

(312) 733-2626 P
(312) 733-4684 F
info@gesafety.com